		MODEL 8A (SINGLE) 9-01-03-13-8A-01	9860-8A (UTILITY) 10-01-03-13-8A-02
		B	C
	A	B	C
	A	B	C
UPPER BAFFLE	D	D	D
UPPER BACK	A	B	C
	A	B	C
LOWER BOTTOM	A	B	C
LOWER SIDES	A	B	C
LOWER BAFFLE	A	B	C
LOWER BACK	A	B	C
CENTER FRONT	D	D	D
CENTER SIDES	D	D	D
CENTER BACK	D	D	D

CODE	MATERIAL & FINISH
A	WALNUT VENEER LAMINATED TO PARTICLE BOARD CORE 145 LB. DENSITY) 3/4" THK. TOTAL; PER ALTEC SPEC. 3A390, OR APPROVED SAMPLE. FINISH: OILED WALNUT PER ALTEC SPEC. 3A391, OR APPROVED SAMPLE.
B	PLAIN SLICED RED OAK VENEER LAMINATED TO PARTICLE BOARD (45LB. DENSITY) 3/4" THK TOTAL; PER ALTEC SPEC. 6A624, OR APPROVED SAMPLE. FINISH: OILED RED OAK PER ALTEC SPEC 6A625, OR APPROVED SAMPLE.
C	BIRCH VENEER OR APPROVED EQUIVLANT, LAMINATED TO PARTICLE BOARD CORE (45LB DENSITY) 3/4" THK. TOTAL; PAINTED BLACK WITH SEARLE L2001-66 PAINT OR SAMPLE APPROVED EQUIVLANT.
D	1/8" THK VINYL "COLUMBUS K-G-SC0004 BLACK MORROCCO OR SAMPLE APPROVED EQUIVLANT, LAMINATE TO 3/4" THK. (45LB DENSITY) PARTICLE BOARD.

BILL OF MATERIALS (COMMON ITEMS)

ITEM NO.	QTY.	ALTEC PART NO.	NOMENCLATURE OR DESCRIPTION	MATERIAL OR NOTE
14	4	28-02-115015	#8-32 T-NUT	1/2 DIA. FLANGE
15	12	28-02-118741	1/4-20 T-NUT	1/2 DIA. FLANGE
16	8		HEDLOK (3MS.J3262)	3M CO.
17	8		SPACER 1/8 THK. x 5/32 I.D. x 5/16 O.D.	BLACK FIBER
18	8	28-01-118714	#6 x 3/8 PAN HEAD PHILLIPS SCREW	STL. BLK OXIDE
19	2	28-01-115535	#6 x 1/2 PAN HEAD PHILLIPS SCREW	
20	1	14-17-034360	TERMINAL CUP	ASSY PER 7C349
21	1		MASONITE 1/8 THK. x 4" x 6"	SMOOTH SIDE ON BOTTOM OF CABINET
22	AS REQ'D		FIBERGLASS (1 1/4 THK.)	OWENS CORNING #701 (7)
23	1		1 1/2" x 2" SOLID STOCK	
24	1	50-01-033937	BASE 3/4" THK. PART. BD.	SEE CODE "D" IN THE MATERIAL AND FINISH BLOCK
25	4		PLASTIC FOOT	PLASTIGLIDE NO. 875-162-LE-8587-0000
26	4		#8 x 2 1/4 PN HD SLOTTED	SHEET METAL SCREW TYPE A
27	2		1/4-20 x 4"	HEX HD BOLT
28	2		1/4	LOCKWASHER
29	4		3/4 x 3/4" x 2" LONG BLOCK HARDWOOD ALDER OR EQUIV.	PAINT BLACK

(12) DRILL TWO 3/32 PILOT HOLES IN CABINET @ 3 1/32 DIA.
(13) COVER FIBERGLASS, VISIBLE THROUGH PORT, WITH BLACK SCRIM.
(14) VENDOR TO STAMP DATE, CODE & VENDOR CODE LISTED ABOVE USING 3/8" MATERIAL IN LOCATION INDICATED, REF. DETAIL 12
(15) ALL JOINTS NOT DETAILED TO BE CONSTRUCTED AT VENDOR OPTION.
(16) ANY SUBSTITUTES MUST BE APPROVED BY THE ALTEC ENGR. DEPT., ANAHEIM.
(17) ITEM 18 IS SUPPLIED WITH KIT 10-01-03-288 FOR VENDORS ASSEMBLING COMPLETE SYSTEM.
(18) CLEATS INSIDE OF ITEMS 1, 3, 5, 7, 8 & 10 WITH ITEM 22 1/4 LB. DENSITY) OR ALTEC APPROVED EQUIV. STAPLE AND GLUE.
(19) MOUNT ITEMS 16 & 17 TO 3/4" BLOCK TO UPPER SIDES WITH ITEM 18 HEDLOK POSITION MUST MATCH UPPER GRILLE #24-05-033935.
(20) MOUNT ITEMS 16 & 17 TO LOWER BAFFLE WITH ITEM 18. HEDLOK POSITION MUST MATCH LOWER GRILLE #24-05-033937
(21) ALL INTERNAL CLEATS MUST BE SEALED AT TRIM.
(22) GLUED, NAILED OR SCREWED INTO PLACE.
(23) PAINT COLOR OF [illegible] ALTEC PART OF THE [illegible]
(24) [illegible] SAMPLES BY THE ENGINEERING DEPT. ANAHEIM

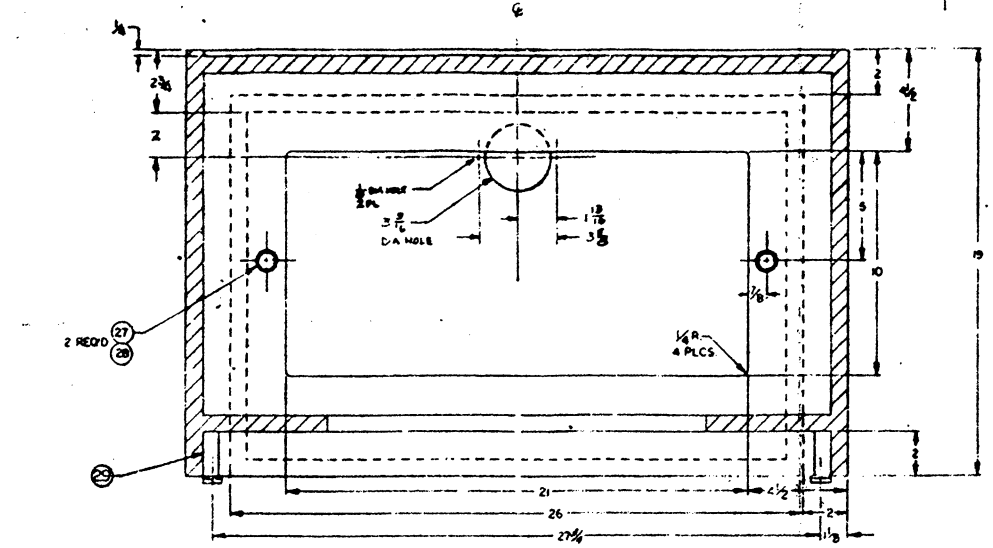

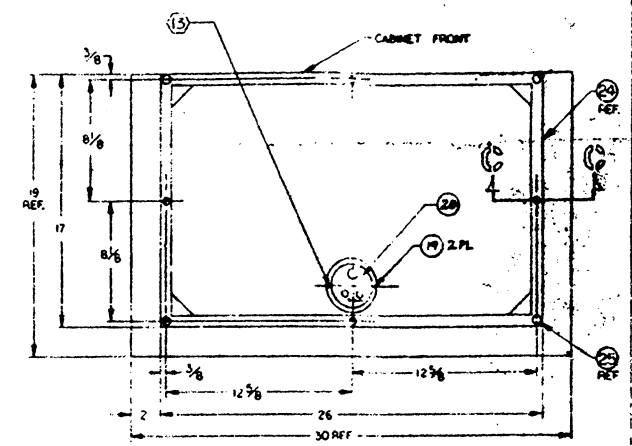

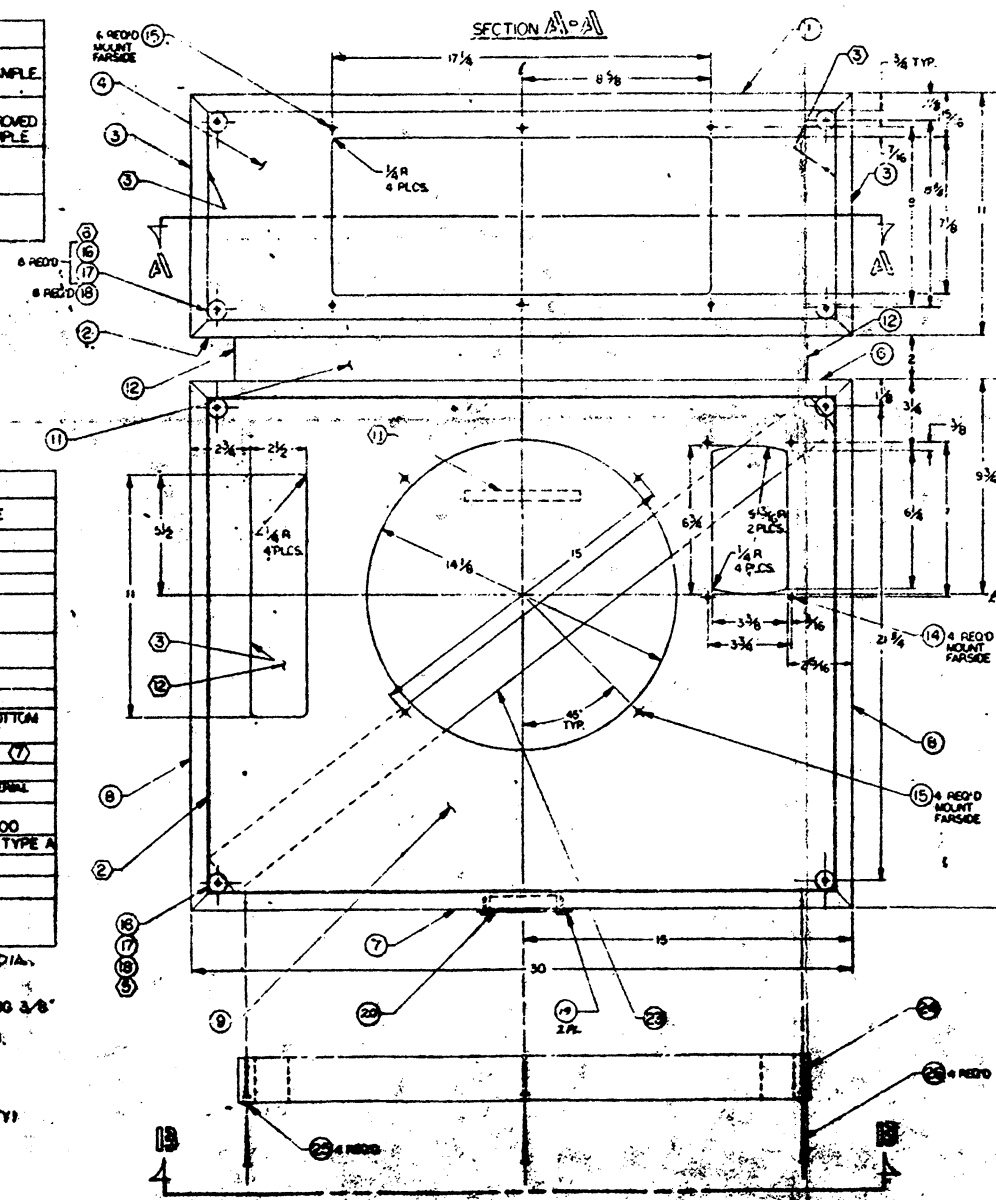

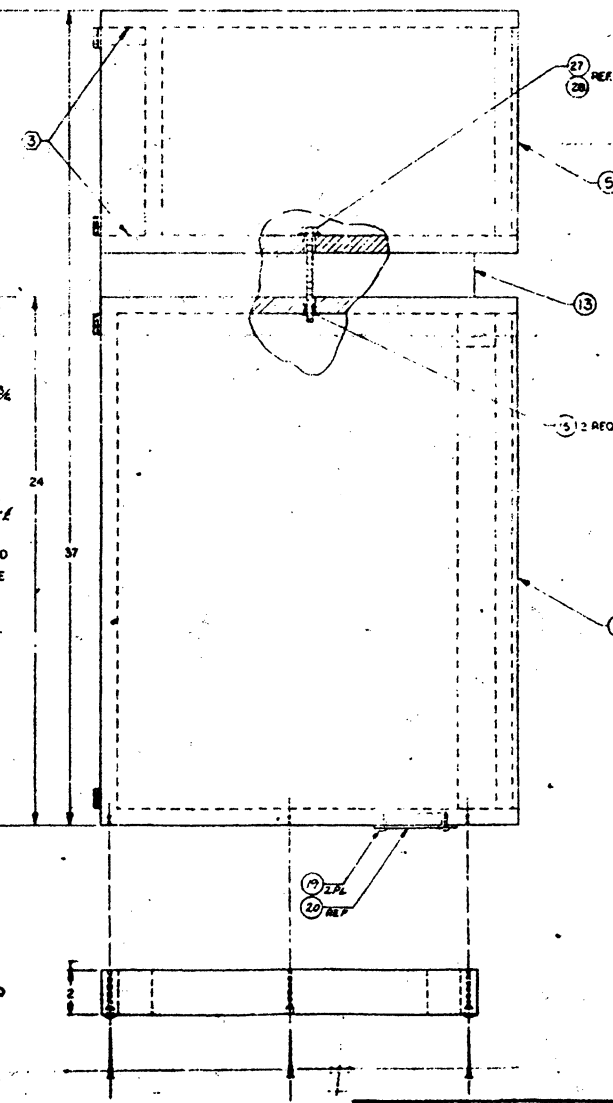

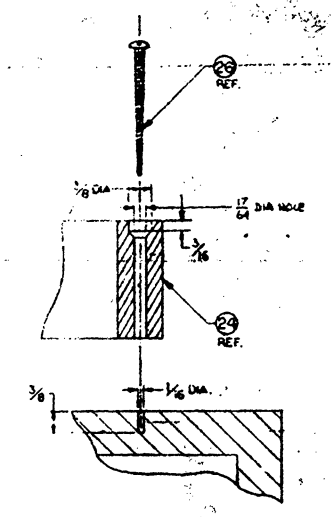

SECTION C-C
SCALE: FULL
TYP. (4) PLCS.

VIEW B-B
BOTTOM VIEW
SCALE: 1/4

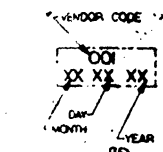

DETAIL 12

01		ADDED NOTE 12	
02		ADDED ITEMS HARDWOOD ALDER	
03		CHANGED NOTES 3 AND 8	
04		FIX-SEE NOTE (2), ADD NOTE .125	
05		ADDED (8) PAN HEAD (2)	
06		ADDED NOTE (8) & CHG. 21 & 24 TO 3/4 BLOCKS	

TOLERANCES UNLESS OTHERWISE SPECIFIED
ANGULAR ± 0°30'
HOLE DIA. ± .005
FINISH: 125 RMS
REF. TAB BLKS.

ALTEC
CABINET