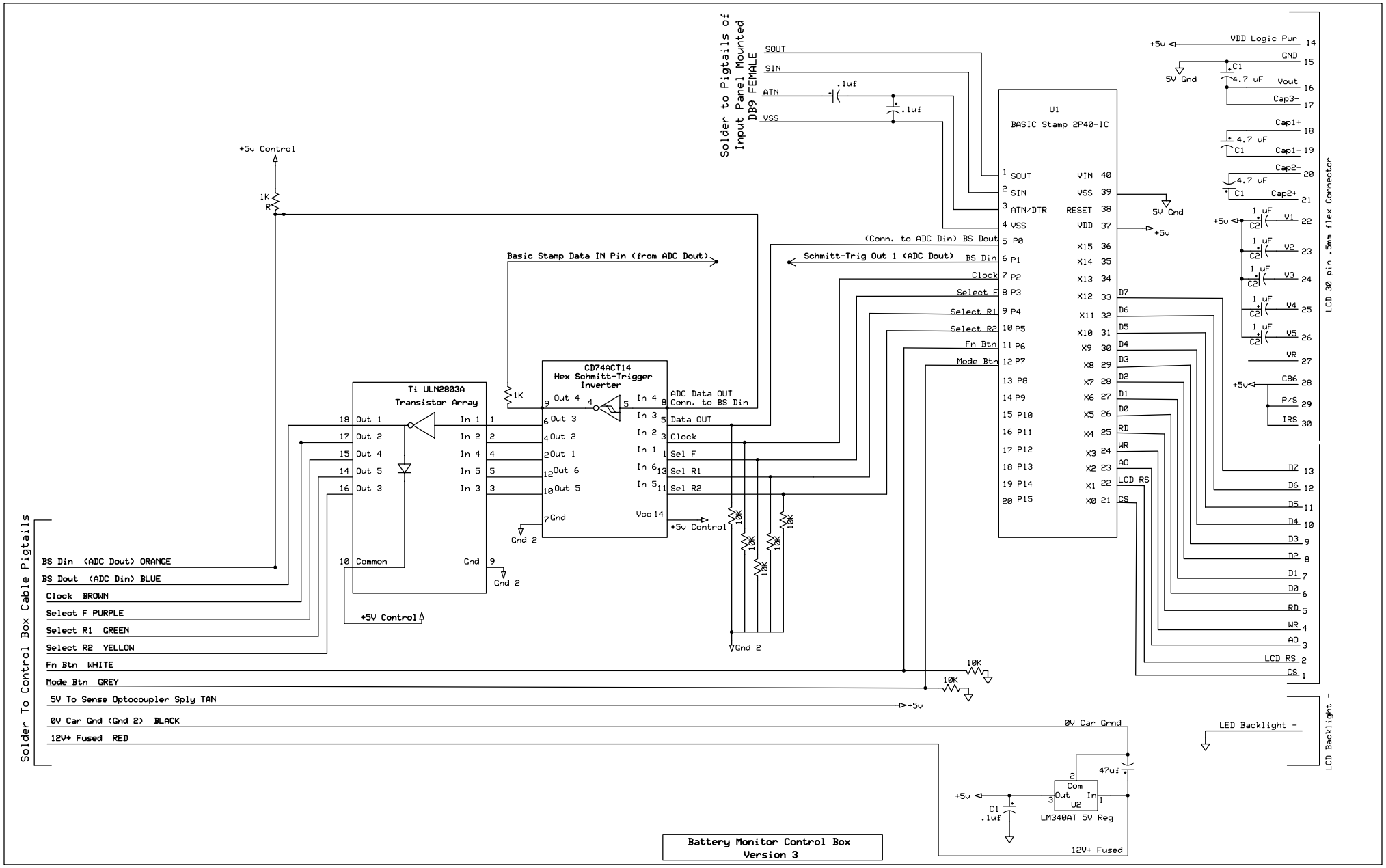
Solder to Pigtails of Input Panel Mounted DB9 FEMALE
SOUT
SIN
ATN
VSS
.1uf
.1uf
U1
BASIC Stamp 2P40-IC
1 SOUT
2 SIN
3 ATN/DTR
4 VSS
5 P0
6 P1
7 P2
8 P3
9 P4
10 P5
11 P6
12 P7
13 P8
14 P9
15 P10
16 P11
17 P12
18 P13
19 P14
20 P15
VIN 40
VSS 39
RESET 38
VDD 37
X15 36
X14 35
X13 34
X12 33
X11 32
X10 31
X9 30
X8 29
X7 28
X6 27
X5 26
X4 25
X3 24
X2 23
X1 22
X0 21
D7
D6
D5
D4
D3
D2
D1
D0
RD
WR
A0
LCD RS
CS
5V Gnd
+5v
VDD Logic Pwr 14
GND 15
C1 4.7 uF
Vout 16
Cap3- 17
Cap1+ 18
4.7 uF C1
Cap1- 19
Cap2- 20
4.7 uF C1
Cap2+ 21
1 uF C2
V1 22
V2 23
V3 24
V4 25
V5 26
VR 27
C86 28
P/S 29
IRS 30
D7 13
D6 12
D5 11
D4 10
D3 9
D2 8
D1 7
D0 6
RD 5
WR 4
A0 3
LCD RS 2
CS 1
LCD 30 pin .5mm flex Connector
LCD Backlight -
LED Backlight -
+5v Control
1K R
1K
Basic Stamp Data IN Pin (from ADC Dout)
(Conn. to ADC Din) BS Dout
Schmitt-Trig Out 1 (ADC Dout)
BS Din
Clock
Select F
Select R1
Select R2
Fn Btn
Mode Btn
CD74ACT14
Hex Schmitt-Trigger
Inverter
Out 4
In 4
ADC Data OUT
Conn. to BS Din
In 3
Data OUT
In 2
Clock
In 1
Sel F
In 6
Sel R1
In 5
Sel R2
Vcc 14
+5v Control
Gnd 7
Gnd 2
Out 3
Out 2
Out 1
Out 6
Out 5
Ti ULN2803A
Transistor Array
18 Out 1
17 Out 2
15 Out 4
14 Out 5
16 Out 3
In 1
In 2
In 4
In 5
In 3
10 Common
Gnd 9
Gnd 2
+5V Control
10K
Gnd 2
BS Din (ADC Dout) ORANGE
BS Dout (ADC Din) BLUE
Clock BROWN
Select F PURPLE
Select R1 GREEN
Select R2 YELLOW
Fn Btn WHITE
Mode Btn GREY
5V To Sense Optocoupler Sply TAN
0V Car Gnd (Gnd 2) BLACK
12V+ Fused RED
Solder To Control Box Cable Pigtails
0V Car Grnd
47uf
Com
Out
In
U2
LM340AT 5V Reg
C1 .1uf
12V+ Fused
Battery Monitor Control Box
Version 3