Equus Studios
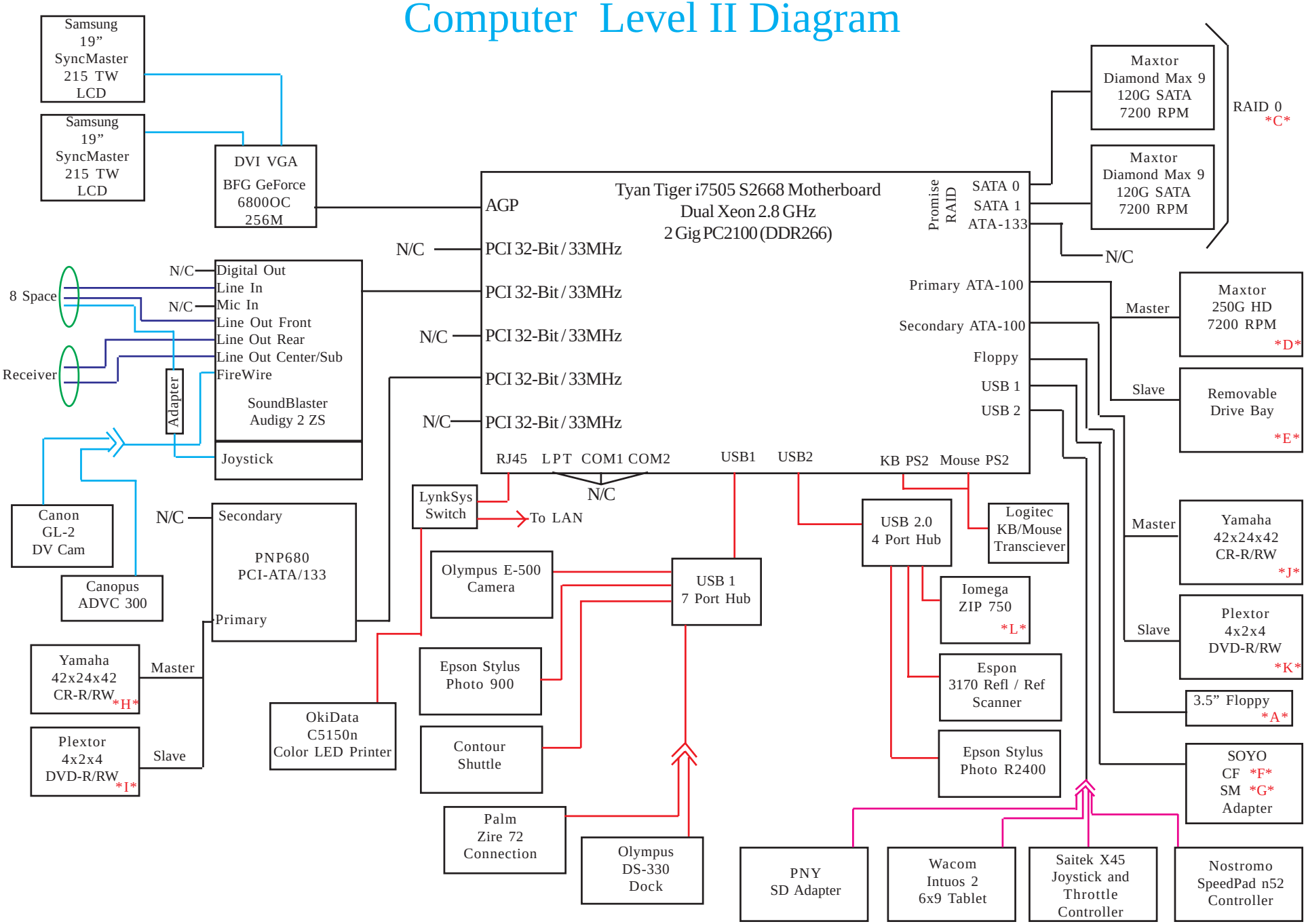
Computer Level II Diagram